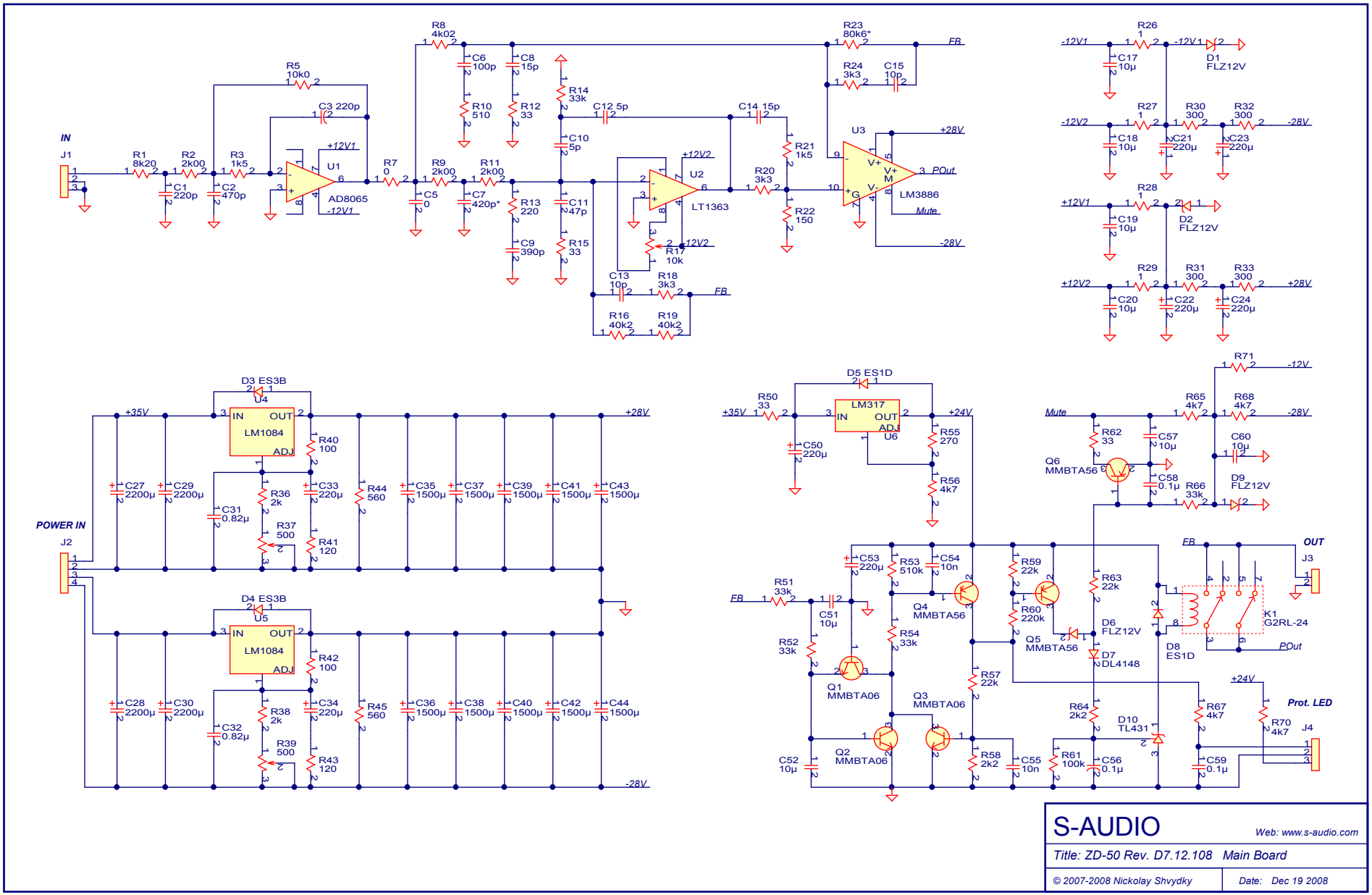

S-AUDIO

Web: www.s-audio.com

Title: ZD-50 Rev. D7.12.108 Main Board

© 2007-2008 Nickolay Shvydky

Date: Dec 19 2008